长广溪智能制造（无锡）有限公司

Changguangxi Intelligent Manufacturing (Wuxi) Co., Ltd.

Collaborative Robot G12 User Hardware Manual

Document version：V1.1

Publish date：May 25, 2023

Document number：CGXi-QM-CR-G12-002

Changguangxi Intelligent Manufacturing(Wuxi) Co., Ltd.

(Wuxi) reserves the right to amend this document without notice. Ltd. is believed to be correct and reliable, but does not guarantee that this document is free from errors. Please make sure that the relevant technical documents and specifications used are up to date before placing an order with Changguangxi Intelligent Manufacturing (Wuxi) Co. If your use of our documents or products involves the application and cooperation of intellectual property rights such as patents or copyrights of third parties, it is your responsibility to obtain consent and authorisation. All of our products may not be used in medical devices, life support systems, aviation and other related equipment without the prior written consent of Changguangxi Intelligent Manufacturing (Wuxi) Co.

Copyright © 2022-2023 Changguangxi Smart All rights reserved

Preface

Thank you for your trust in Changguangxi Smart Collaborative Robot and team, we will provide you and your team with quality products and comprehensive technical services with full of sincerity and enthusiasm!

1. About collaborative robots

Collaborative robots are a new type of industrial robot that can work in tandem with people on a production line, making full use of machine efficiency and human intelligence. The G-Series collaborative robots developed and manufactured by Changguangxi are made up of robotic arms, control cabinets and trainers. The arm is of high quality, with modular joints and an aluminium alloy arm tube for faster speed, smoother trajectory and more accurate positioning; the control cabinet is embedded with a self-developed embedded control board, using EtherCAT real-time bus, with a control frequency of 1kHz; the trainer is embedded with a self-developed embedded control board, using RK3288W as the main control chip. The main control chip is RK3288W, with a CPU frequency of 1.8G, supporting wired/wireless/4G communication networks, and a powerful human-machine interaction capability in the UI of the demonstrator.

The **G-Series redefines the next generation of high-speed collaborative robots** and will bring a new experience to your industrial intelligence journey!

2. How to use this manual

The user manual consists of a **hardware chapter** and a **software chapter**. The hardware chapter describes the robot's components, installation, mechanical and electrical characteristics, and wiring; it is aimed at users who install, **commission and design systems using robots.**

If you have purchased this product, we recommend that you use it as follows:

1. it is recommended that you first read through this manual to familiarize yourself with the robot's composition, characteristics, operation and programming control methods;

2. it is recommended that you follow the electrical wiring rules in this manual and perform a thorough check of the hardware connections before powering up the robot, and ensure that the utility power supply is normal and that the connections between devices are reliable;

3. it is recommended that you follow this manual's Getting Started 2.3 Start-up guide guide when powering up the robot;

4. it is recommended that you strictly follow the hazards/warnings/cautions/tips in this manual regarding

safety during the use of the robot.

3. Access to more information and services

You can obtain further information and services as follows:

1.Visit the official website of Changguangxi Smart(www.cgxi.com).

2.Please scan the two-dimensional code on the right to follow Changguangxi Zhizhu micro letter public number.

公众号

Contents

Preface 1
1. About collaborative robots 1
2. How to use this manual 1
3. Access to more information and services 2
Contents 3
Safety 5
1. Introduction 5
2. Safety signs 6
2.1 Description 6
2.2 Cautions 6
3. Liability and risk 10
3.1 Risk assessment 10
3.2 Scope of responsibility 11
4. Handling of emergencies 12
4.1 Introduction 12
4.2 Emergency stop 12
4.3 No electric drive 12
5. Proposed use 14
Hardware Part 15
1. Introduction to robotics 16
1.1 Composition 16
1.1.1 Packing list 16
1.1.2 Hardware connection diagram 16
1.1.3 Robotic arm 17
1.1.4 Tool side 17
1.1.5 Control cabinets 18
1.1.6 Demonstrator 19
1.2 Shipping 21
1.2.1 Packing gesture 21
1.2.2 Handling 21
2. Introduction to use 22

2.1 Workspace 22
2.1.1 Maximum working space 22
2.1.2 Variable attitude space 22
2.2 Installation 23
2.2.1 Robotic arm 23
2.2.2 Tool side 25
2.2.3 Control cabinets 26
2.2.4 Demonstrator 28
2.3 Start-up guide 28
2.3.1 Cable connections 29
2.3.2 Working mode 30
2.3.3 Parking category 31
2.3.4 Power up and start 32
3. Electrical communication interfaces 33
3.1 Introduction 33
3.2 Control cabinets 33
3.2.1 External interfaces 33
3.2.2 Internal interfaces 34
3.3 Tool side 45
3.3.1 Tools I/O 46
3.3.2 Tools COM 47
4. Maintenance and repair 49
5. Quality Assurance 50
5.1 Quality assurance 50
5.2 Disclaimers 50
Appendix 51
A. Robot Technical Specification Sheet 51
B. Payload 54
C. Accreditation 55
CE Certificate of Conformity 55
SEMI S2 Certificate of Approval 59

Safety

1. Introduction

This chapter describes safety-related issues as the robot is subject to certain safety risks during operation.

The robot is equipped with a number of safety-related features configured to limit the range of motion of the robot's arm joints and tool center point (TCP). The robot limits safety-related functions as shown in Table 1.

Table 1 Robot restricted safety menu

Restricted security features	Description
Joint position	Minimum and maximum angular position of joints
Joint speed	Maximum angular velocity of joints
TCP Location	TCP position plane of the robot arm in Cartesian space
TCP Speed	Maximum speed of the robot arm TCP
TCP Force	Maximum thrust of the robot arm TCP
Momentum	Maximum momentum of the robot arm
Power	Maximum power applied by the robot arm

Dangers:

If the robot uses safety configuration parameters that differ from the safety criteria defined by the risk assessment performed by the integrator, this can result in risks that cannot be reasonably eliminated or adequately avoided.

Caution:

1.The use and configuration of robot safety-related features must be based on a risk assessment performed by the integrator for the specific robot application.

2.The robot detects a fault in the safety system during operation or outside the limits of the safety setting function, e.g. if the emergency stop circuit connection is cut.A failure of a position sensor or position sensor, or a breach of a safety-related function restriction, will trigger a shutdown protection category 0, as defined in 2.3.3 Parking category .

2. Safety signs

2.1 Description

Robot safety warning-related signs are described in Table 2.

Table 2 Explanatory table for robot safety signs

Logo	Description
	This sign indicates that failure to operate in accordance with the regulations could result in injury or serious damage to the equipment.
	This sign warns that failure to operate in accordance with the regulations may result in injury or serious damage to the equipment.
	This sign draws attention to the fact that failure to follow the regulations may result in injury to persons or damage to equipment.
	This sign indicates information that requires focused attention.

2.2 Cautions

The user must read the following descriptions carefully and be fully familiar with the safety matters described in Table 3 in order to protect personnel and prevent damage to the product.

Table 4 is to be followed when first starting up the robot or the system equipment equipped with the robot arm, more detailed safety-related information is presented separately in other sections of the manual.

In practice, please assess the operational risks of the equipment in the light of the site conditions.

Table 3 Illustrative table of robot risk symbols

Risk markers	Description
	1. Be sure to install the robot and all related electrical equipment in accordance with the requirements and specifications in this manual. 2. The robot and its protection system must be tested and inspected before using the robot for the first time and before putting the equipment equipped with the robot into operation. 3. Before starting up the equipment for the first time, you must check that the equipment is complete and safe to operate. It needs to be checked for compliance with national or regional safety regulations in force and all safety functions must be tested in advance. 4. The user must check and ensure that all safety parameters and user programs are correct and that all safety features are in effect. A person qualified to operate the robot is required to check and confirm the corresponding safety functions item by item, and the robot can only be started after a thorough and careful safety test has been performed and the safety level has been reached. 5. Professional personnel are required to install and commission the robot according to the installation standards. 6. After the robot is installed or the system equipment is built, a full risk assessment is required. 7. The safety parameters are set and changed by authorized personnel, and passwords or isolation measures are used to prevent unauthorized personnel from changing or setting the safety parameters. After the safety parameters are modified, the relevant safety functions need to be reanalyzed and defined. 8. In case of an accident or abnormal operation of the robot's robotic arm, the emergency stop switch can be pressed to stop the robotic arm action immediately. 9. The robot's arm joint module is equipped with a brake to maintain the arm's posture during power failure. 10. The robot arm has a collision detection function. If the external force exceeds the force range set by the user when the robot is powered on and working normally, the robot arm will stop moving automatically to prevent the robot arm or the operator from collision and injury. This function is designed for the safety of human-machine cooperation, which requires the robot arm to be in normal motion and use the factory control cabinet. If users develop their own control cabinet, can not ensure that the robot arm with the above safety protection features, the resulting dangerous consequences borne by the user.

	1. Make sure the robot arm is firmly fixed and the tools are safely installed before powering up. 2. Make sure that the robot arm has enough space to move before powering up the robot, so as to prevent collision with external equipment. 3. If the robot's arm is damaged, do not continue to power up the robot, and contact the manufacturer's pre-sales technical service immediately. 4. Do not connect the safety device to the general-purpose I/O interface; the safety device should only be connected to the safety I/O interface. 5. Ensure that the installation setup items are properly configured (e.g. robot mounting angle, TCP end tool weight, TCP offset, etc.). 6. Tools and obstacles must not have sharp protrusions and ensure that human heads and faces cannot be touched by the robot arm or its end tools. 7. Always be alert to the robot's robotic arm movement state, and configure the robot safety protection level through the demonstrator. Any impact with low safety protection level may release huge energy. 8. Connecting different pieces of machinery may aggravate hazards or create new ones. 9. Do not alter the robot yourself. Any modifications to the robot may cause unpredictable hazards and Changguangxi Smart rejects all responsibility for this. 10.Before transporting the robot, the user needs to check the insulation and protective measures. 11.When transporting the robot, comply with the transport requirements and handle it carefully to avoid bumping. 12.The use of the free dragging function during installation is only allowed if it passes the risk assessment.
	1. When the robot's arm is connected to or working with machinery that can cause damage to the arm, it is highly recommended that all functions and operating procedures of the arm are checked and tested in a separate working area. 2. Changguangxi Smart is not responsible for any damage or injury to the robot caused by programming errors or improper operation. 3. Do not expose the robot to permanent magnetic fields at all times; strong magnetic fields may damage the robot.

Table 4 Table of precautions before starting the robot

Risk markers	Description
	1. The operator of the robot must be able to fully grasp the operation process of safety norms and be qualified to operate the robot. 2. Please do not wear loose clothing, jewelry, long hair behind your head or work helmet when operating the robot. 3. The robot arm may be in a stopped position while working, and may be waiting for a signal from a peripheral device, and will immediately switch to a motion state once the signal is received. This in the robot arm visually in the stop state, but the actual is in motion in the suspended waiting state, during this period the user cut easy to touch. 4. If necessary, draw lines on the floor to mark the work space area of the robot arm and end tool. 5. Ensure that safety guards (e.g., guardrails, ropes, or protective grating) are established near the robot's robotic arm operating area to protect the operator and surrounding people. 6. Gloves may cause operational errors when operating the touch screen of the trainer, so be sure to remove gloves before operating. 7. When a person is caught in the robot's robot arm or robot arm joint, push or pull the robot arm by external force (at least 700N) to force the joint to move in an emergency. Only move the robot arm manually in an emergency without electric power, this situation may damage the robot arm joints.

3. Liability and risk

3.1 Risk assessment

Integrators need to do risk assessments before using robots or in programme design to ensure safe and reliable applications. Integrators need to assess the safety requirements of the actual application scenario in all aspects, including but not limited to the robot. Some occasions can be designed to avoid the safety requirements of the use scenario through the risk protection of the overall solution, especially in the case of human-machine collaboration, and can effectively avoid the application risks through the reasonable use of the robot's safety configuration features.

Integrators are advised to take full account of the relevant safety measures in ISO 12100, ISO 10218 and ISO 15066 in the use of their robots and in the design of their integration solutions.

There are, but not limited to, the following risks in the specific application of the robot's robotic arm:

● Possible risk of pinching or jamming between the first joint of the robot arm and the mounting base;

● The potential risk of hand gripping in the four and five joints of the robot arm (the robot arms of the G series have been mechanically designed to prevent hand gripping, but the risk of hand gripping cannot be absolutely excluded);

● Risk of puncturing co-workers if tools have sharp burrs or spikes；

● In the process of human-machine collaboration, if the collision occurs in non-vulnerable parts of the human body, such as hands and legs, there is a risk of pain; if the collision occurs in vulnerable parts of the human body, such as the neck, eyes and back of the head, there is a risk of injury or even death；

● Risks of all kinds of use due to loose or dislodged mounting screws of all kinds causing objects to fall from the tool, or if the clamping is not in place or the power is off；

● Risks due to manual errors, gaps in solution design and programming errors.

In the practical application of the G12 robotic arm, it is recommended to refer to the following safety regulations:

[1]. ISO 12100：2010 Safety of machinery - General principles of design - Risk assessment and risk reduction;

[2]. ISO 10218 - 1：2011 Robotic arms and robotic arm equipment - Safety requirements - Part 2: Industrial robotic arm systems and sets Becoming;

[3]. RIA TR R15.306 - 2014 Technical report on industrial robotic arms and robotic arm systems - Safety requirements, task-based risk assessment Valuation methods;

[4]. ANSI B11.0 - 2010 Safety of machinery: general requirements and risk assessment.

3.2 Scope of responsibility

Robots can be combined with other devices to form a complete plant system, but the plant system itself may not be complete, so this manual does not cover how to fully design, install and operate a complete plant system. The integrator needs to carry out a full risk assessment of the complete equipment system, both in terms of design and installation, in accordance with the laws, regulations and safety codes and standards of the country in which it is located.

Integrators can refer to the following criteria to perform the risk assessment process.

[1].ISO 12100:2010 Safety of machinery - General principles of design - Risk assessment and risk reduction.

[2].ISO 10218-1:2011 Robotic arms and robotic arm equipment - Safety requirements - Part 2: Industrial robotic arm systems and integration.

[3].RIA TR R15.306-2014 Technical report on industrial robotic arms and robotic arm systems - safety requirements, task-based risk assessment methods.

[4].ANSI B11.0-2010 Mechanical safety; general requirements and risk assessment.

Changguangxi Smart cannot ensure that all safety aspects contained in this manual are absolutely safe in actual system operation. Even if all safety instructions are followed, injury to personnel or damage to equipment caused by the operator may still occur.

4. Handling of emergencies

4.1 Introduction

In the event of an unexpected situation in actual use, appropriate emergency measures can be taken, including but not limited to emergency shutdown and no electrical drive.

4.2 Emergency stop

In the event of a robot emergency, the emergency stop button can be pressed in the first instance, immediately cutting off the drive source to the robot arm and stopping all activities of the arm. The emergency stop cannot be used as a risk reduction measure, but can be used as a secondary protection device. It ensures that in the event of a malfunction or hazard, the source of danger is removed at the first opportunity, eliminating any other hazards that could be introduced by the robot arm.

Emergency stop can also be achieved by using the emergency stop button on the control cabinet panel, the emergency stop button on the top of the demonstrator, or by externally accessing the device controlling the emergency stop via the safety I/O, as described in robot introduction1.1.5 Control cabinets,1.1.6 Demonstrator .

4.3 No electric drive

Some extreme occasions need to move the robot arm in the case of power failure, such as the robot arm running in the process of squeezing to people, after the emergency stop, need to move the robot arm open in the first time, then you can take the method of operation without power drive, there are two ways of operation as follows:

First, open the rear end cover of the joint and press the brake (a small electromagnet as shown in Figure 1) without releasing it, the joint can then be turned Movements.

Secondly, directly through external force, pushes the mechanical arm joints (1 and 2 joints need about 510Nm torque, 3 joints need about 200Nm torque, 4, 5 and 6 wrist joints need about 85Nm torque) to make the holding brake mechanical structure produce relative position sliding, so that the mechanical arm can move.

Fig. 1 Small solenoid

5. Proposed use

The G-Series collaborative robots are suitable for industrial applications where the functional requirements and safety requirements are average, or for commercial applications where they have been carefully evaluated. General industrial applications include product picking, loading and unloading, screw locking, case palletizing, etc.; commercial applications include the vending of products that have been evaluated for safety features.

The G-Series collaborative robots are human-robot collaborative robots that can be used for human- robot collaboration without the need for protective fencing. Although the G-Series collaborative robots are equipped with a variety of safety features to meet the needs of human-robot collaboration, they are still not immune to all safety risks, such as installation risks due to TCP mounting of dangerous tools, etc. In practice, any application outside of the intended use is risky, including but not limited to the following applications:

- Potentially flammable and explosive sites;
- Medical and other applications serving human work;
- Places where the end tool poses a serious threat to humans and where human-machine collaboration is required;
- Application sites that have not been risk assessed and tested;
- Any premises used without a satisfactory safety function assessment;；
- Places for medical vital handling, etc.

Part I

Hardware Part

1. Introduction to robotics

1.1 Composition

1.1.1 Packing list

A complete list of G12 collaborative robots shipped is shown in Table 5.

Table 5 List of shipments

Name	Model	Number	Remarks
Robotic arm	R12-135S	1 table	Comes with 6m cable to control cabinet
Demonstrator	S1-A12S	1 table	Supplied with 5m cable to control cabinet
Control cabinets	K20-002S	1 table	Standard type
Control cabinet power cable		1 article	Length 1.5 m
Control cabinet door key		1 hand	Opening and closing of control cabinet doors
Factory conformity inspection certificate		1 copy	Factory Certificate of Conformity

1.1.2 Hardware connection diagram

The hardware connections for the G12 collaborative robot are shown in Figure 2.

Fig. 2 G12 collaborative robot hardware wiring diagram

1.1.3 Robotic arm

The G12 collaborative robot arm consists of six modular joints, a large arm tube and a small arm tube. Each joint incorporates high power density servo motors, servo drives, encoders, holding brakes and harmonic gearboxes. The arm is fixed to the external base by means of a base attached to joint 1.

The actuating tool is fixed at the end by means of a tool flange. Its 6 joints can be rotated and the flange end of the tool can be moved in translation or rotation in the working space.

The G12 arm is connected to the control cabinet via a special cable fixed to the base and is powered by a +48V DC power supply from the control cabinet, as shown in Figure 3.

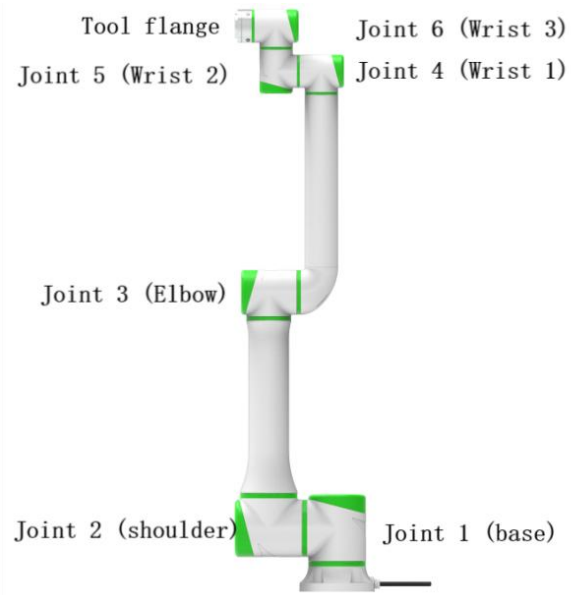

Fig. 3 Mechanical arm structure composition diagram

1.1.4 Tool side

The tool end is physically shown in Fig. 4, with the buttons and interfaces described in Table 6.

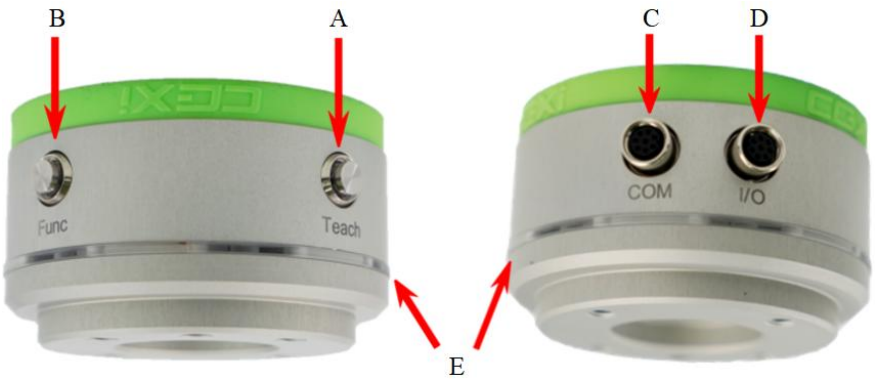

Fig. 4 Physical view of the tool end

Table 6 Description of the tool-side buttons and interfaces

Number	Buttons	Description
A	Teach Button	Press and hold the button without releasing it to drag the arm freely; once released, the arm stops moving immediately.
B	Func Button	Reserved for extended function use; no action on current press, long press or release of this button.
C	COM port	Serial communication interface, 8-pin, see 3.3 Tool side for electrical interface description.
D	I/O port	8 pins, electrical interface described in 3.3 Tool side.
E	Ring with three colour indicators	Consistent with the meaning of the three coloured indicators on the control cabinet panel: ● red, representing a power-up robot arm not enabled or a robot arm collision alarm (holding brake on) or a fault (holding brake off); ● Blue, meaning that the robot arm is enabled (holding brake open) and in normal operation; ● Green, means the robot arm can be dragged for teaching.

1.1.5 Control cabinets

The Control Cabinet - K20 is shown in Figure 5 and its panel functions are described in Table 7.

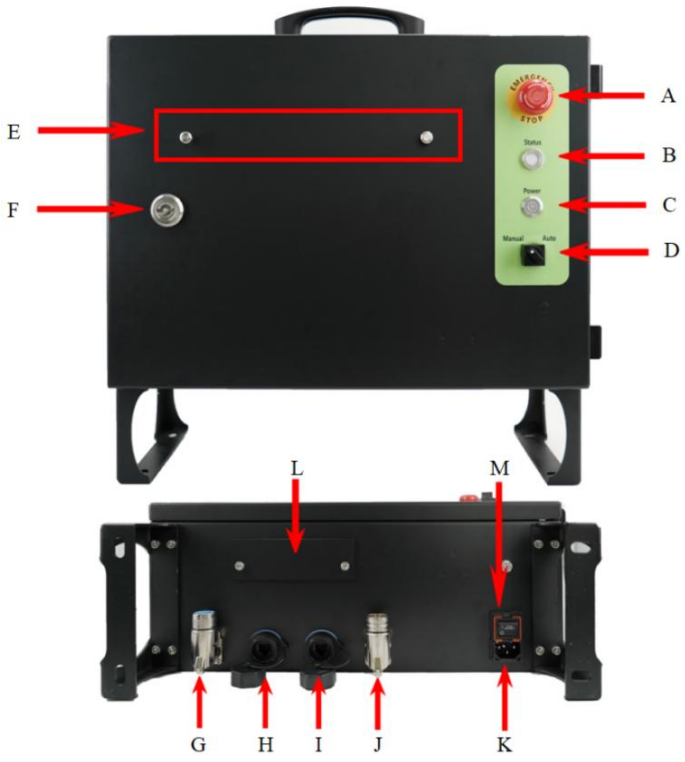

Fig. 5 Control cabinet - K20 physical diagram

Table 7 Control cabinet panel function description

Number	Buttons and interfaces	Description
A	Emergency stop button	●Press to disconnect the power supply to the arm, which closes and stops immediately; ● When pressed and rotated to the right, the button will automatically pop up and exit the emergency stop.
B	Three-color status indicator	● red, representing a non-enabled or faulty power-up robot arm (holding brake off); ● Blue, meaning that the robot arm is enabled (holding brake open) and in normal operation; ● Green, means the robot arm can be dragged for teaching.
C	Power button (light touch with white LED light)	● pressed in the off state, the control cabinet and the demonstrator are powered up and the white indicator status light is on; ● When pressed in the on state, the demonstrator LCD pops up with a shutdown prompt, manually operate the screen pop-up to achieve shutdown.
D	Manual/automatic mode changeover switch	● The switch (white dot) points to Manual and the arm works in manual control mode after power-up; ● The switch (white dot) points to Auto and the arm works in automatic mode after power-up. The operating modes are described in **the start-up guide** 2.3.2 Working mode.
E	Hanging nails	2 pieces (for hanging the demonstrator).
F	Cabinet door locks	Factory equipped control cabinet door key to open or close the control cabinet door;It is forbidden for non-professionals to open the cabinet door without permission.
G	ROBOT interface	Dedicated, attached robotic arm.
H	RJ45 Ethernet port LAN1	10M/100M adaptive, for connection to external network devices. For more details on the use of **the control cabinet**, see 3.2.1 External interfaces.
I	RJ45Ethernet port LAN2	10M/100M adaptive, for connection to external network devices. For details on the use of **the control cabinet**, see 3.2.1 External interfaces.
J	TEACH PENDANT interface	Dedicated, connected to the demonstrator.
K	POWER IN interface	Power supply pin socket male connector, connected to external utility power.
L	Electrical wiring outlet in the control cabinet	2 screws to fix, removable.
M	City well power switch	● Press I to turn on the external utility power; ● Press O to disconnect external utility power.

1.1.6 Demonstrator

The demonstrator is shown in Figure 6, and its appearance is described in Table 8.

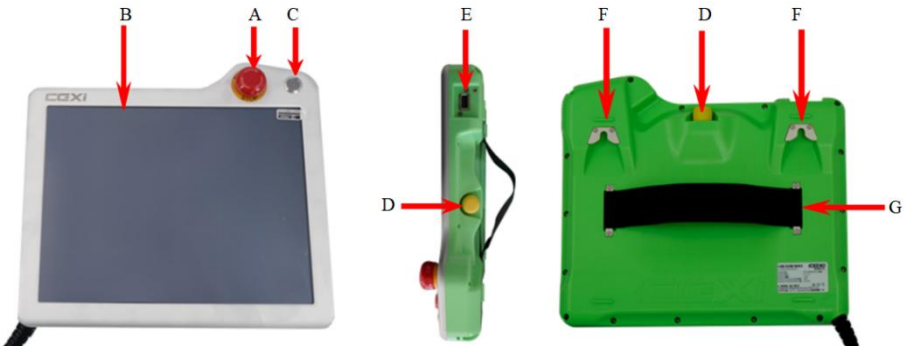

Fig. 6 Physical diagram of the demonstrator

Table 8 Description of the appearance of the demonstrator

Number	Buttons and interfaces	Description
A	Emergency stop button	● Press to cut off the power supply to the arm, which closes and stops immediately; ● Press to rotate to the right and the button will automatically pop up and exit the emergency stop.
B	LCD screen	12.1" resistive touch screen with 1024*768 display resolution.
C	Power button	Light touch with white LED light: ● Pressing the button in the off state, the control cabinet and the demonstrator are powered on and the white indicator status light is on; ● Press in the power-on state, the demonstrator LCD pop-up shutdown prompt, manually operate the LCD screen pop-up window to achieve shutdown.
D	Tri-state button	Three states: normal / press 1 / press 2, with compound function: ● Free dragging function: After the robot is powered on and normally enabled, when block 1 is pressed and not released, the tool end indicator turns from blue to green and the robot arm enters free dragging mode, at which time the user can drag the arm freely; ● Software version upgrade function: Before the demonstrator is powered up, when the 1st gear is pressed and in the state of long press without releasing, the demonstrator will automatically enter the software upgrade function interface when the button is released, the software function can be upgraded. Software version upgrade See **the Collaborative Robotics Self Update Manual** for leveling methods.
E	USB2.0 interface	● For importing or exporting project files, system software upgrades, etc. ● For instructions on how to upgrade the software using a USB stick, see **the Collaboration Robot Self-updating Manual.**
F	Clips	For fixing the demonstrator.
G	Carrying strap	Used to hold the demonstrator.

1.2 Shipping

For transport, please use the special packaging provided by Changguangxi Smart to restore the robot's robot arm to its factory packed position.

1.2.1 Packing gesture

Operate the demonstrator interface to adjust the rotation angles of the 6 joints by means of joint movements and pack the stance angles as shown in Table 9.

Table 9 Robot packing stance

Joint Name	Joint 1	Joint 2	Joint 3	Joint 4	Joint 5	Joint 6
Joint Angle	-90°	0°	150°	30°	0°	0°

The packing status of the body, control cabinet, and demonstrator is shown in Figure 7.

Fig. 7 Package status of the body, control cabinet and demonstrator

1.2.2 Handling

When moving the arm from the box to the installation space, hold the arm by both arm tubes at the same time and hold the arm until all the mounting bolts are tightened at its base. After transport, the packaging material is placed in a dry environment and protected for future repackaging.

Caution:

When lifting the arm, ensure that the person's back or other body parts are not overloaded, or use appropriate lifting equipment.

2. Introduction to use

2.1 Workspace

The robot's workspace refers to the set of spatial points that can be reached by the reference point of the robot's end-effector motion description.

The working space of the G12 collaborative robot is approximated as 1 sphere.

2.1.1 Maximum working space

The maximum working space is the maximum working space that can be reached from the centre point of the tool in at least one direction. In practice within the cylindrical area directly above and below the base, which is prone to singularities (no solution for inverse kinematics), this range is not recommended.

The maximum working space of the robot arm of the G12 collaborative robot is approximated by a sphere with a radius of 1300 mm, as shown in Figure 8.

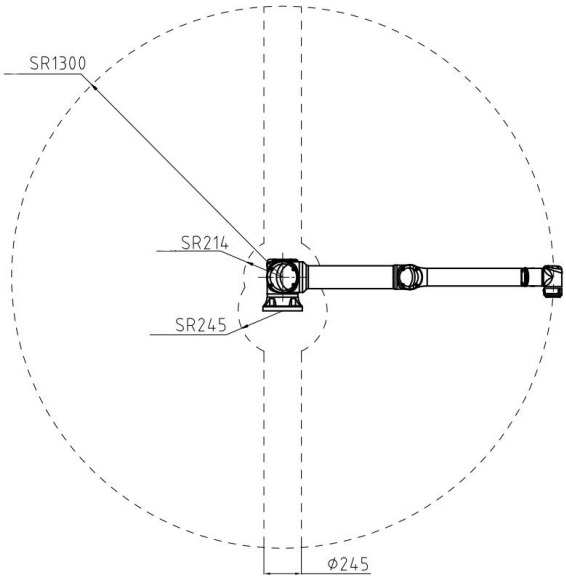

Fig. 8 Maximum working space of G12 collaborative robot arm

2.1.2 Variable attitude space

Variable attitude space refers to a working space where the centre point of the tool can change attitude, i.e. where it can be reached from any direction. Variable attitude space refers, in the case of robotic arms, to the distance from the centre of the two-joint axis to the centre of the four-joint axis.

The variable attitude space of the arm of the G12 collaborative robot is approximated as a sphere with a radius of 1183 mm, as shown in Figure 9.

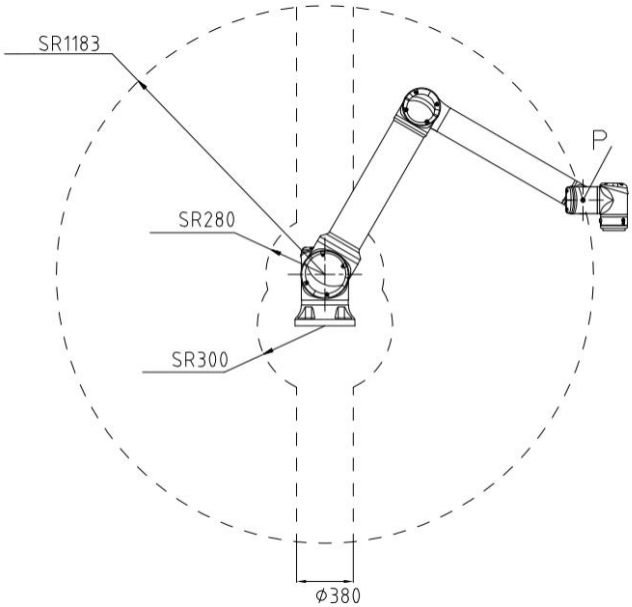

Fig. 9 G12 collaborative robot arm variable posture space

Warning:

1. Only joint movements can satisfy the maximum workspace movement, when using other movement commands only movements in the variable attitude space are possible;
2. When moving the end of the robot arm tool in the variable attitude space, try to avoid moving in the cylindrical space directly above and below the base. When moving into this cylindrical space, the tool will move slowly while some of the joints rotate faster, which is inefficient and difficult to assess the risk.

2.2 Installation

The brief steps to install the robot are shown in Table 10.

Table 10 Robot installation steps

Steps	Operation method
1	Secure the robot arm base to the mounting base.
2	Attach the actuation tool to the tool end of the robot arm.
3	Place the control cabinet in an out-of-reach working environment location.
4	Hang the demonstrator on the side of the control cabinet or on another reliable work surface.

Caution:

The working space of the robot arm must be determined before installation to prevent safety risks caused by collisions.

2.2.1 Robotic arm

2.2.1.1 Mechanical dimensions

The mechanical dimensions of the G12 robot arm and base are shown in Figure 10.

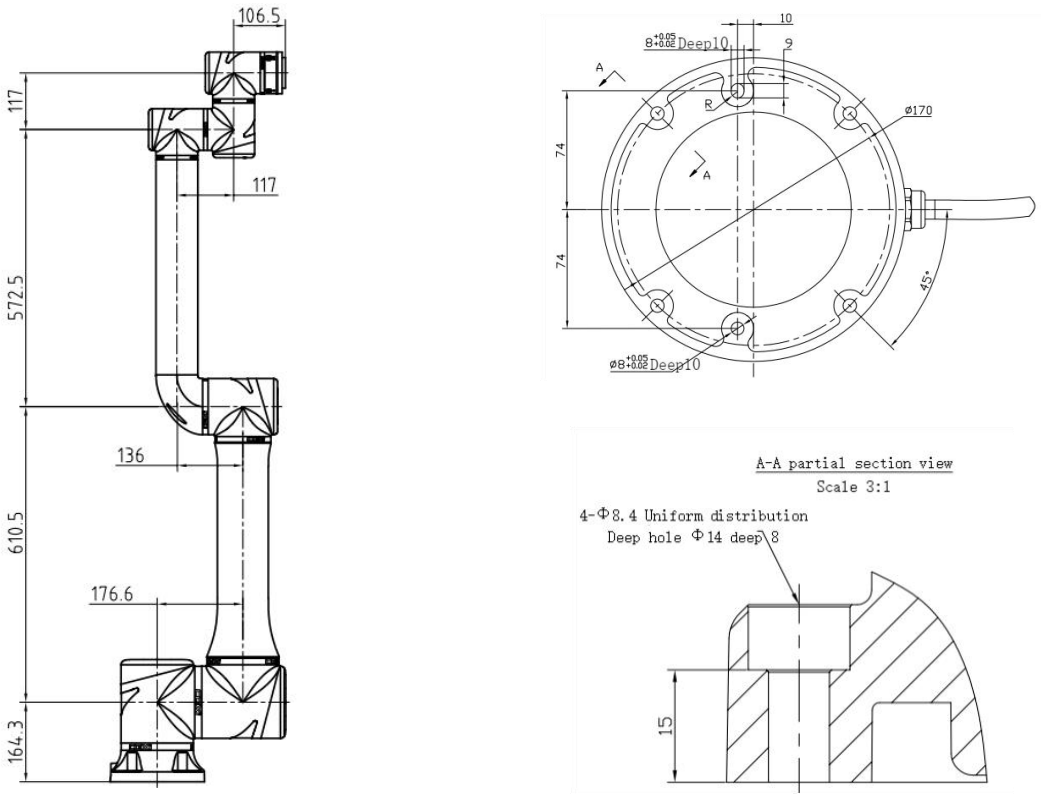

Fig. 10 Mechanical dimensions of G12 robot arm and base in mm

2.2.1.2 Mounting method

The robotic arm can be mounted at any angle as shown in Figure 11. The robot arm base is fixed with four 12.9 grade M8 bolts, which need to be tightened with 40Nm torque. The base is designed not only with mounting holes, but also with two Ø8mm positioning holes to strengthen the fastening.

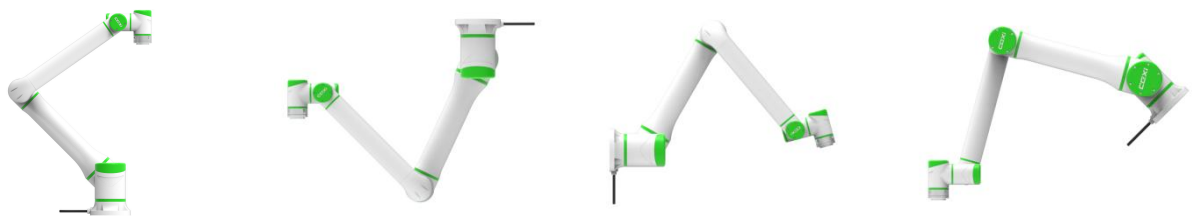

a）Normal installation b）Installed upside down c）Sideways installation d）Angled installation

Fig. 11 Diagram of the installation of the robot arm at each angle

Dangers:

1. When installing the robot arm at different angles, the installation initialization parameters must be set in the UI interface of the demonstrator, refer to the software chapter;

2. The mechanical structure of the robot arm may be unstable and may cause tipping over if the arm is not securely fixed to the base;

3. The robotic arm should be used in an environment that matches its IP rating to help reduce failures and extend the life of the arm.

The recommended base mounting surface dimensions are shown in Figure 12.

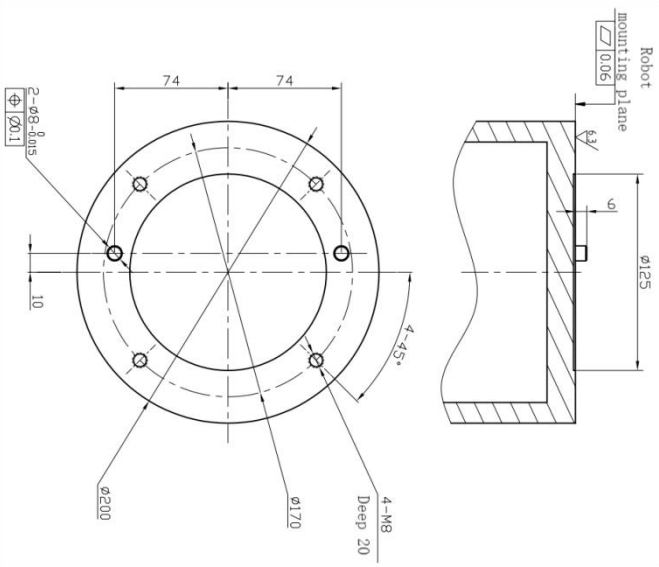

Fig. 12 Dimensional drawing of the recommended base mounting surface in mm

2.2.2 Tool side

2.2.2.1 Mechanical dimensions

The mechanical dimensions of the tool end flange are shown in Figure 13.

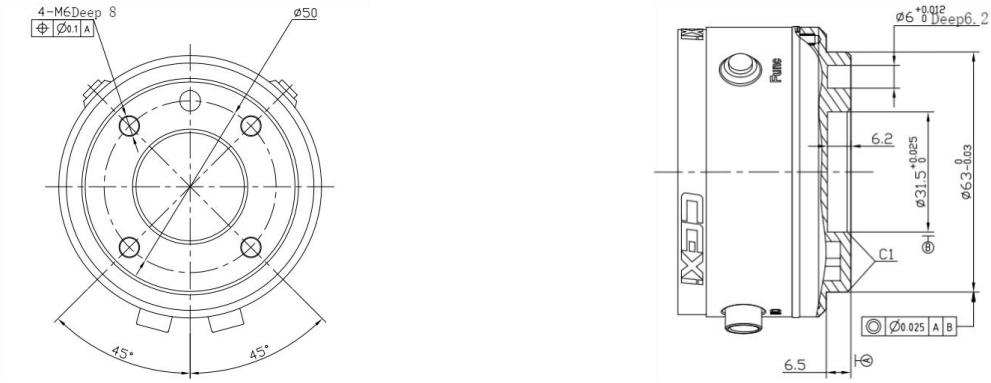

Fig. 13 Dimensional drawing of the tool end flange in mm

2.2.2.2 Mounting method

The tool end has four M6 bolt holes and one Ø6 locating hole, and the tool flange interface conforms to ISO 9409-1-50-4-M6 (Operating Industrial Robots. The tool flange interface conforms to ISO 9409-1-50-4-M6 (Mechanical interface for operating industrial robots), through which the actuating tool is mounted.

Warning:

1. All f o u r M6 threaded holes have a strength class 12.9 and must be tightened with a torque of 16Nm;
2. It is recommended that the fixing plate fixed to the end of the tool be provided with waist-shaped positioning holes in the radial direction to avoid excessive restraint;
3. The length of the bolts securing the end tool must not exceed 8 mm in addition to the thickness of the end tool to prevent damage to the end flange housing;
4. Ensure that the end-actuators are reliably installed to prevent danger from falling;
5. The screwing length of the bolts holding the end tool should be 6-8 mm to prevent the bolts from slipping during tightening and making it impossible to attach the end tool.

2.2.3 Control cabinets

2.2.3.1 Mechanical dimensions

The dimensions of the control cabinet are shown in Figure 14.

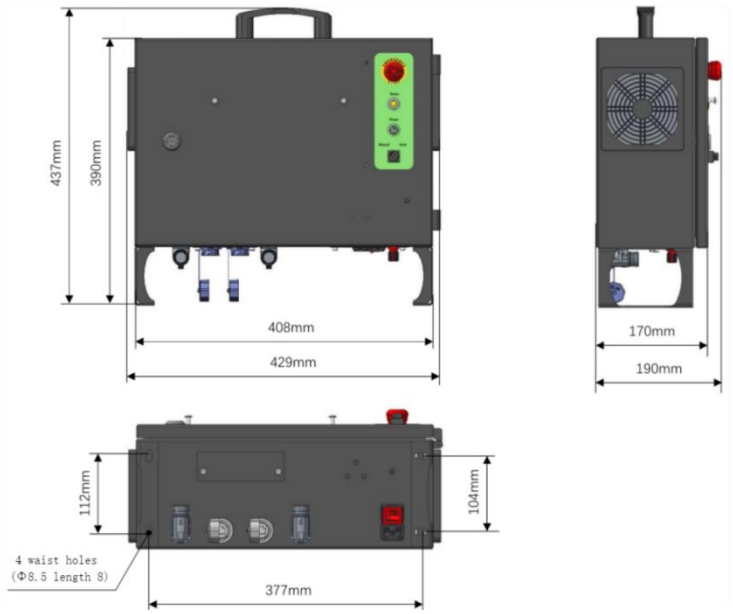

Fig. 14 Mechanical dimensions of the control cabinet

2.2.3.2 Mounting method

The control cabinet is installed vertically, lying diagonally or placed inside other large cabinets, etc. The four waist-shaped holes at the bottom of the cabinet are used for fixed use, as shown in Figure 15. The installation should ensure that the control cabinet leaves no less than 50mm gap on each side to ensure smooth air circulation.

（a）Vertical state （b）Lying flat

Fig. 15 Schematic diagram of control cabinet installation

Dangers:

1. Ensure that the control cabinet's extremely connected cables do not come into contact with liquids; wet cabinets can lead to death by electric shock;
2. There is strong electricity inside the control cabinet, and non-professional authorized persons are not allowed to open the control cabinet door.

Warning:

The side of the control cabinet with the emergency stop button should be placed in a conspicuous and convenient location for operation, and there is no risk of accidental touching.

2.2.4 Demonstrator

2.2.4.1 Mechanical dimensions

The dimensions of the demonstrator are shown in Figure 16.

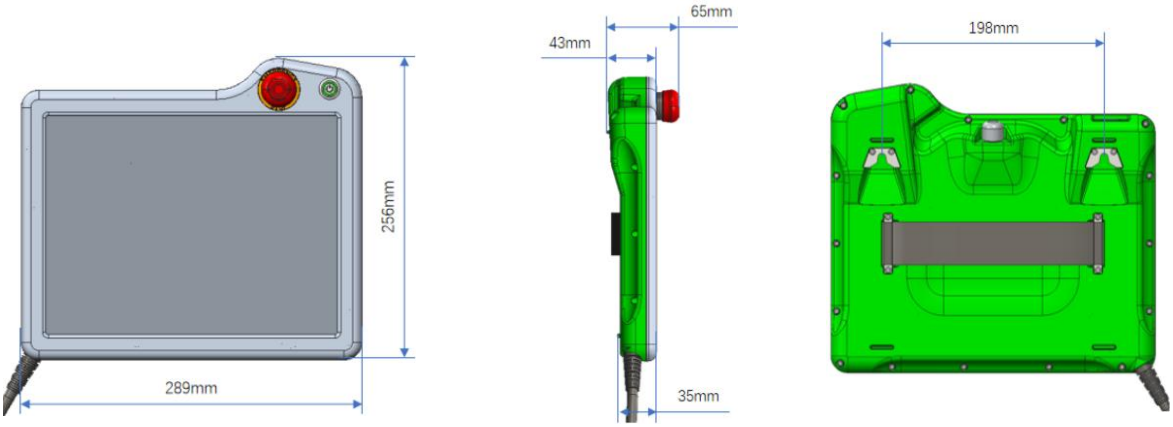

Fig. 16 Mechanical dimensions of the demonstrator

2.2.4.2 Mounting method

The demonstrator can be hung from the control cabinet or from a solid wall or the side of the operating equipment, making sure that the connection cables are not bent back and forth, as shown in Figure 17.

Fig. 17 Physical view of the demonstrator hanging from the control cabinet pegs

2.3 Start-up guide

After completing the robot installation, be sure to double check before powering up for the first time that:

● Whether the robot arm base has been securely fastened to the base.

● Whether the fixture and work-piece are sufficiently fixed (it is not recommended to install the fixture and work-piece for the first time using the start-up machine to prevent safety risks from mishandling).

Caution:

Once the above checks have been completed and you have confirmed that it is safe, **please read the following sections carefully and carry out the start-up operations in strict order.**

2.3.1 Cable connections

The control cabinet provides power for the demonstrator and the robot arm, which must be connected to the corresponding interface on the control cabinet panel.

Please follow the steps below:

Step 1: Connect the trainer to the control cabinet

● Connect the demonstrator cable to the control cabinet [TEACH PENDANT interface] as shown in Figure 18.

Fig. 18 Demonstrator cable connection diagram

Step 2: Connect the robot arm to the control cabinet

● Connect the robot arm cable to the control cabinet [ROBOT interface] as shown in Figure 19.

Fig. 19 Robot arm cable connection diagram

Step 3: Connect utility power to the control cabinet

● Connect the utility power to the control cabinet as shown in Figure 20 [POWER IN connector].

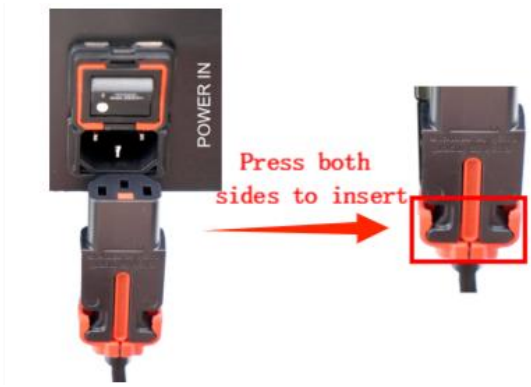

Fig. 20 Diagram of the mains connection

Caution:

1. aviation plug in the connection of the action to be gentle, when encountering resistance should check whether the pin is skewed, if any, need to be corrected and then inserted to avoid damage to the pin;;

2. will be aligned with the air plug as shown above, gently press down, can no longer press down, slowly turn the middle of the fixed knob (if you can not turn the plug can be slightly shaken above left and right), turn to the naked eye to observe the upper and lower fit and can not continue to turn after stopping. Connection process to pay special attention to prevent loosening resulting in poor contact and can not be turned on;

3. the power plug (female) to the control cabinet power supply Pin Zi socket (male), press the red circle on both sides of the figure insert.

After completing the robot cable connection, the next step is to determine the robot's operating mode.

2.3.2 Working mode

External devices can control the robot's movement status via the robot's III. Electrical communication interfaces, with different control rights over the robot in Manual and Auto modes. The operating mode of the robot is determined by the Manual/Auto mode changeover switch on the control cabinet panel.

● Auto (automatic) mode: All control of the robot by external devices is in effect, and software configuration can be performed through the demonstrator UI.

● Manual mode: Control of the robot by external devices is only effected by the [Free Drag] (see Software chapter/Configuration [System Input]) option.

Caution:

1. After the robot is powered on, toggling this switch button to switch the working mode is still in effect;

2. The mode changeover switch must correspond to the actual working mode you need the robot to run. Be sure to check and verify it carefully, otherwise it may affect the normal operation of the robot.After determining the working mode of the robot, the next step must be to master the shutdown category of the robot. Different shutdown categories have a direct

impact on safety and protection as well as the service life of the robot.

2.3.3 Parking category

IEC 60204-1 defines robot shutdown categories in Table 2.1, and G-Series collaborative robots follow these three shutdown categories, as shown in Table 12.

Table 11 IEC60204-1 Shutdown categories and descriptions

Shutdown Category	Description
Category 0	Stop the robot by cutting the power immediately.
Category 1	Stop the robot arm in an orderly and controlled manner and, once stopped, cut off the power supply.
Category 2	● Stopping the robot arm while maintaining the trajectory of the movement by means of the power available to the drive; ● The drive power is maintained after the robot arm has stopped moving.

Table 12 Description of robot shutdown trigger conditions and recovery

Downtime Category	Trigger conditions	Recovery
Category 0	Cut off the mains supply to the city well.	The control cabinet was re-powered after the fault was cleared.
Category 1	External emergency stop button (demonstrator/control cabinet) At least one was pressed.	After the accident has been lifted, turn the emergency stop button clockwise and pull it out again to reapply power.
Category 2	The safety stop signal is active.	Manually operate the demonstrator screen or automatically re-run the program after troubleshooting.

Attention:

1. The emergency stop button is installed on both the control cabinet and the demonstrator. Check the status of these two buttons carefully before powering up the robot;
2. The G-Series collaborative robot arm maintains its trajectory without deviating from its current path and accelerates and decelerates until it comes to a stop during a class 1/2 stop.

2.3.4 Power up and start

The power-on start-up operation instructions are shown in Table 13.

Table 13 Power-on start-up operating instructions

Steps	Operation	Note
1	The control cabinet panel **[Manual/Auto mode changeover switch]** points to the intended operating mode, which is Manual by default.	
2	Press the **[power switch]** I block on the bottom panel of the control cabinet (see red box shown) to turn on the external utility power.	
3	Press the **[Power button]** (shown in red) on the top of the demonstrator or on the control cabinet panel to power up the control cabinet and demonstrator.	
4	The control cabinet panel **[three-colour status indicator]** lights up (red), the demonstrator screen lights up and enters the power- on start-up interface, at this time the mechanical arm is not powered up, the control arm is powered up and enabled for details See the software section for detailed steps.	

3. Electrical communication interfaces

3.1 Introduction

The electrical communication interface of the robot refers to the tool-side electrical communication interface between the control cabinet and the robot arm. When the robot works with its end-effector tools, external electrical equipment, or other robots, the electrical communication interface needs to be physically connected for data interaction.

Warning:

G12 series robots have passed the international IEC electromagnetic compatibility (EMC) test and conform to the technical standard of industrial environment electromagnetic compatibility (GB/T 17799.2-2003 GB T17799.4-2012), but the interference signal generated by the level higher than the standard (e.g. welding) may cause abnormalities to the robot's work, at this time, you can consult the pre-sales technical service of Changguangxi In this case, you can consult the pre-sales technical service personnel of Changguangxi Smart for special EMC protection treatment.

Dangers:

1. All electrical connections need to be kept dry as this could lead to damage to the robot or even endanger people's lives. In the event of inadvertent exposure to water, switch off all power immediately and contact your supplier quickly;
2. Please use the original cable for the electrical connections and avoid bending the cable, if you need to purchase additional cables please contact your supplier.

3.2 Control cabinets

Control cabinet-K20 is the standard control cabinet for G12 collaborative robots. There are electrical communication interfaces LAN1 and LAN2 at the bottom of the cabinet, and three bus communication interfaces of I/O and RS232/RS485/RJ45 inside the cabinet, all of which can be used to connect external devices.

3.2.1 External interfaces

The external electrical communication interface of Control Cabinet-K20 mainly refers to the 2 standard RJ45 interfaces at its bottom: LAN1 and LAN2, as shown in Figure 3.1. Both interfaces support 10/100M adaptive wired network, and the supported peripherals are described as follows:

- Supports direct connection to network devices following the Modbus TCP protocol

Refer to the Software chapter for configuration instructions, this section details how to configure the connection to a device

that follows the Modbus TCP protocol.

- Support for extended connections to common network devices following the TCP/IP protocol

Communication with peripherals by means of SDK software programming, detailed programming usage is described in the **Advanced User Guide**.

3.2.2 Internal interfaces

The control cabinet-K20 internal electrical communication interfaces include digital I/O, analog I/O, encoder interface, I/O power and remote control, RS232, RS485, and RJ45 bus interfaces. Internal connections can be made through the electrical wiring outlets on the bottom of the cabinet (shown in red in Figure 21).

Fig. 21 Internal interface of the control cabinet

Caution:

1. If the electrical wiring inside the cabinet needs to be led out, removing the wiring exit board will make the control cabinet seal protection invalid, need to conduct protection safety assessment;

2. If you have special requirements for the control cabinet sealing protection, you can contact your supplier for assistance.

The control cabinet-K20 internal electrical communication interface is shown in Figure 22.

Fig. 22 Diagram of the internal electrical communication interface of the control cabinet

3.2.2.1 Digital I/O

The digital I/Os include safety I/Os, configurable I/Os and standard I/Os with electrical characteristics according to IEC 61131-2. The digital I/Os can optionally be powered by internal +24 V or external +24 V power supply, see interface 3.2.2.4 Remote control and I/O power inside the control cabinet for connection options.

The general electrical specifications for digital I/O are shown in Table 14.

Table 14 Digital I/O General Electric Specification Table

Digital output	Parameter	Minimum value	Typical value	Maximum value	Unit
COX/DOX	Voltage	22	24	26	V
COX/DOX	Current	0	-	1	A
Digital Inputs	**Parameter**	**Minimum value**	**Typical value**	**Maximum value**	**Unit**
EIX/SIX/CIX/DIX	Voltage	0	-	24	V
EIX/SIX/CIX/DIX	ON Voltage Range	0	-	15	V
EIX/SIX/CIX/DIX	OFF Voltage Range	21	-	24	V
EIX/SIX/CIX/DIX	Current (0-15V)	2	-	6	mA

Caution:

The sum of all digital output currents is not greater than 1A.

3.2.2.1.1 Safety I/O

There are two groups of safety I/O: emergency stop (EI0_R/EI0_T, EI1_R/EI1_T) and safety stop (SI0/GND, SI1/GND), both of which are input signals that are dedicated to safety device access and cannot be

used for other purposes.

The safety I/O input interface circuits are all designed with dual channel redundancy to guarantee reliable signal reception, and their internal interface circuits are shown in Figure 23.

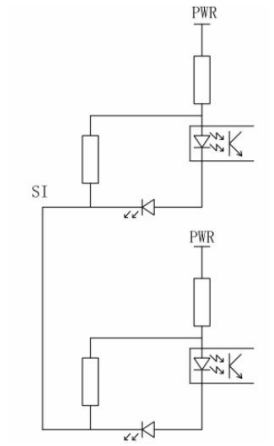

Fig. 23 Safety I/O internal interface circuit diagram

● The two pairs of terminals EI0_R/EI0_T and EI1_R/EI1_T are the emergency stop inputs, either pair is disconnected to bring the robot to an emergency stop. When connecting the emergency stop button, the same pair of terminals is connected to both ends of the emergency stop button.

● The two pairs of terminals SI0/GND and SI1/GND are the safety stop inputs. If either pair is disconnected, the robot enters the safety stop state. When connecting the safety stop button, the same pair of terminals is connected to both ends of the safety stop button.

The robot emergency stop input is only used for emergency stop device access, while the safety stop input can be used for access to various safety-related protective devices such as cell doors, light curtains or light beams. The difference between the two is shown in Table 15.

Table 15 Difference between emergency stop and safety stop robot states

	Emergency Stop	Safety stop
Robotic arm stops moving	Yes	Yes
Program Stop	Yes	Suspension
Power supply for robotic arms	Cut off	Open
Reset recovery campaign	Manual	Manual/automatic
Frequency of use	Occasional	Frequent
Re-power initialization	Yes	No

Emergency stop

The use of double-loop connection, one way to disconnect that stop, when connected to multiple emergency stop button, the button can be connected in series, as shown in Figure 24.

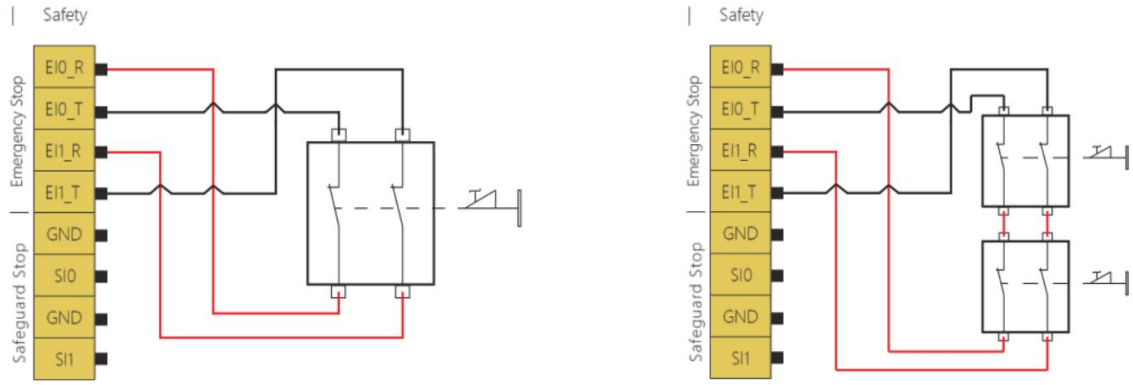

Fig. 24 Robot emergency stop wiring

Safety stop

There are two types of safety stop, automatic recovery and manual reset required (configured in the UI interface of the demonstrator, refer to the software section for instructions).

Connect the safety light curtain and provide +24V power supply, the wiring diagram of automatic recovery after safety stop is shown in Figure 25.

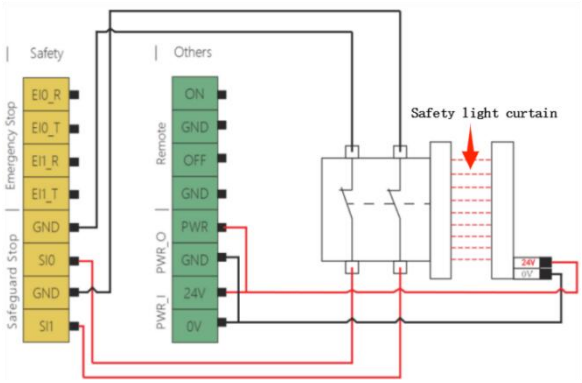

Fig. 25 Wiring diagram for automatic recovery after a safe stop of the robot

The safety stop to be reset manually requires the use of configurable I/O (for use, see control cabinet internal interface 3.2.2.1.2 Configurable I/O). Connect the safety light curtain and provide a +24V power supply, the wiring for a safety stop that needs to be reset manually after the safety stop is shown in Figure 26.

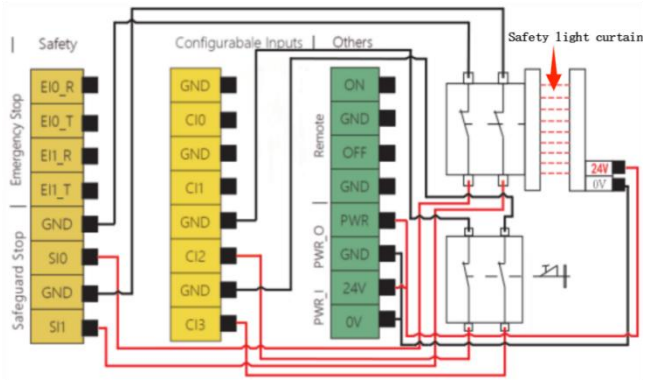

Fig. 26 Safety stop wiring to be reset by the robot

3.2.2.1.2 Configurable I/O

The control cabinet has 8 configurable I/Os for each input and output and the interface circuit is shown in Figure 27.

- CIX (X is 0~7) indicates configurable digital input, default is high, low is active.
- COX (X is 0~7) indicates configurable digital output, default is high resistance state, low level is valid.

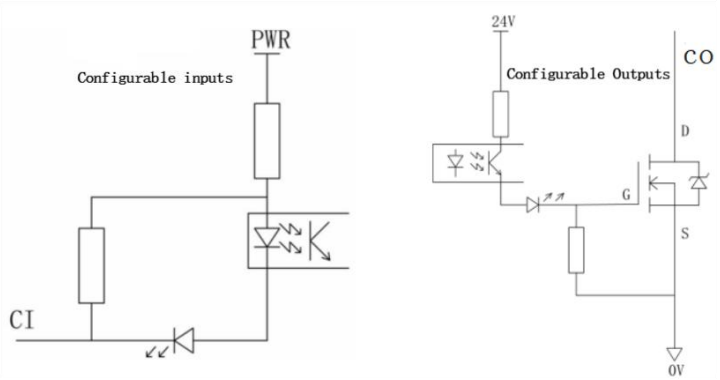

Fig. 27 Configurable I/O internal interface circuit diagram

Configurable I/O can be used as standard I/O or configured as safety I/O by pair, i.e. safety I/O input (CI0/1, CI2/3, CI4/5, CI6/7 in 4 pairs) and safety I/O output (CO0/1, CO2/3, CO4/5, CO6/7 in 4 pairs), as shown in Figure 28. Refer to the software chapter for detailed configuration.

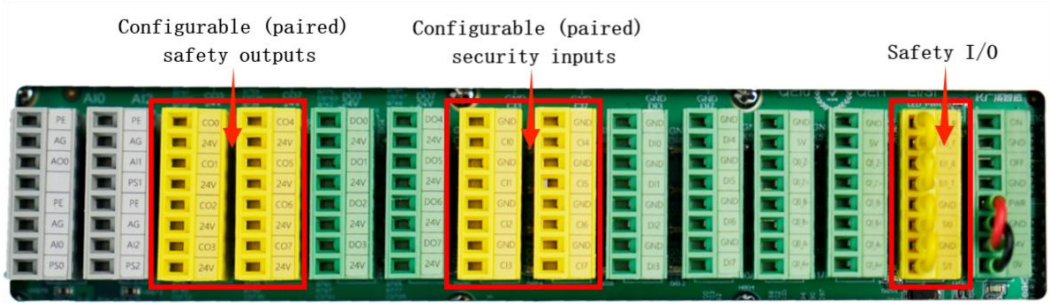

Fig. 28 Schematic diagram of the safety I/O interfaces inside the control cabinet

Caution:

1.Configurable I/Os must be wired in pairs in parallel when used for safety I/O functions;

2.When used as safety I/O input, it can be configured for emergency stop, **safety stop**, etc. When used as safety I/O output, it can be configured for status output signals such as **arm emergency stop, arm movement, arm stop**, etc., as described in the software chapter.

Share Emergency Stop

When robots are used with other machines, it is often necessary to have a common emergency stop circuit. In the event of an emergency, the operator can press any emergency stop button in the common circuit and stop all movement of the robot arm with the other machines at the same time.

When sharing the emergency stop function with other machines, the emergency stop input EI is not available for sharing and can be implemented via configurable I/O.

● Configurable input: External emergency stop.

● Configurable output: system emergency stop.

The two different robots share the emergency stop wiring as shown in Figure 29. CI0-CI1 and CO0- CO1 are configurable digital I/O inputs and outputs respectively.

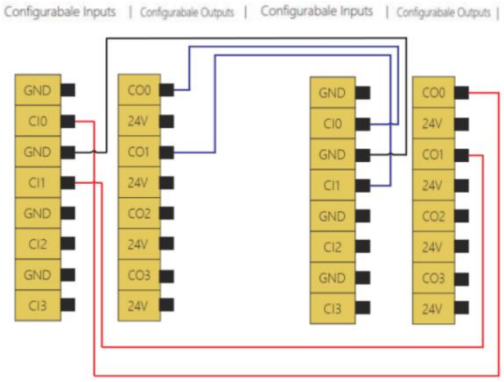

Fig. 29 Connection diagram for two different robots sharing the emergency stop internal I/O interface

3.2.2.1.3 Standard I/O

The Control Cabinet-K20 has 8 common standard digital I/Os for each input and output, the interface circuit is shown in Figure 30.

● DIX (X is 0~7) port is digital input, default is high, low active.

● DOX (X is 0~7) port is digital output, default is high resistance state, active low.

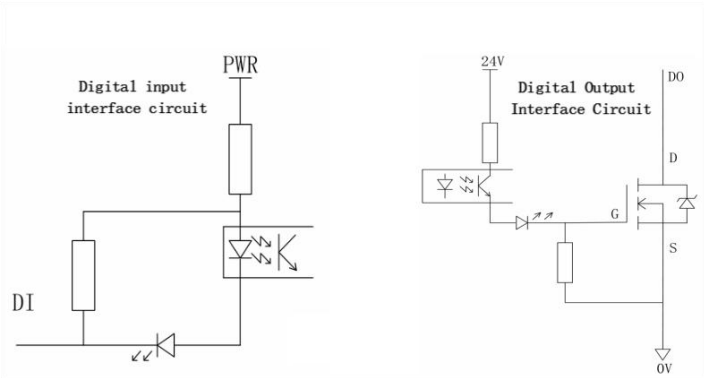

Fig. 30 Standard I/O internal interface circuit diagram

Universal standard digital input connection switch button, universal standard digital output connection indicator, wiring as shown in Figure 31.

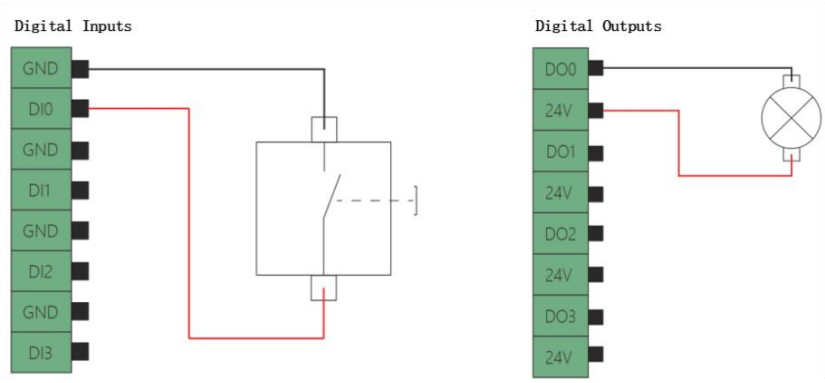

Fig. 31 Standard I/O input and output wiring reference diagram

3.2.2.2 Analogue I/O

Inside the control cabinet-K20, there are 3 analog inputs AIX (X is 0~2), 1 analog output AO, PE is protection ground, PSX (X is 0~2) terminal provides power for the sensor, output voltage +24V, typical load current 20mA.

The analog type is divided into current and voltage, and the type is selected by dip switches, see Figure 32.

- The dipswitch is set to "Current" for current type.
- Dipswitch is set to "Voltage" side for voltage type.

Fig. 32 Diagram of the analogue terminals and dip switches inside the control cabinet

Tip:

For the Demonstrator UI software, the type (unit) setting must be the same as the dipswitch selection type, otherwise the correct value will not be displayed on the corresponding monitoring screen.

The general analog I/O electrical specifications are shown in Table 16.

Table 16 General Analog I/O Electrical Specifications Table

Analog input in current mode	Parameter	Minimum value	Typical value	Maximum value	Unit
AIX-AG	Current	4	-	20	mA
AIX-AG	Resistance	-	249	-	Ohm
AIX-AG	Resolution	-	16	-	position
Analog input in voltage mode	**Parameter**	**Minimum value**	**Typical value**	**Maximum value**	**Unit**
AIX-AG	Voltage	0	-	10	V
AIX-AG	Resolution	-	16	-	position
Analog output in current mode	**Parameter**	**Minimum value**	**Typical value**	**Maximum value**	**Unit**
AO0-AG	Current	4	-	20	mA
AO0-AG	Resistance	-	498	1200	Ohm
AO0-AG	Resolution	-	12	-	position
Analog output in current mode	**Parameter**	**Minimum value**	**Typical value**	**Maximum value**	**Unit**
AO0-AG	Voltage	0	-	10	V
AO0-AG	Resistance	-	498	1200	Ohm
AO0-AG	Resolution	-	12	-	位

To ensure that analog signals are not interfered with, wiring should follow:

- Use the same GND for both the device and the control cabinet.
- Use shielded cable or twisted pair connection.

The wiring of the analogue input to the sensor is shown in Figure 33.

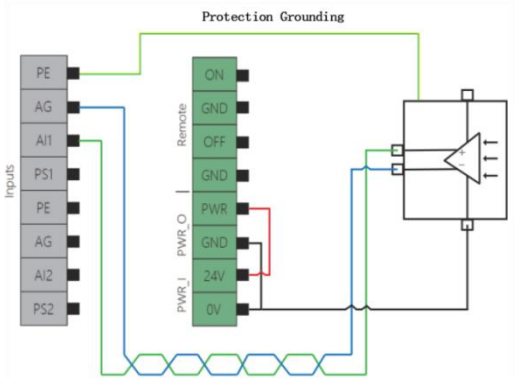

Fig. 33 Analog I/O external sensor wiring reference

3.2.2.3 Encoder interface

The two differential encoder inputs are defined as shown in Figure 34 and can be externally connected to a

position encoder (e.g. to collect the position encoder output signal from a conveyor belt). 5 V is dedicated to the encoder power supply and the external current output is limited to a maximum of 150 mA, please refer to **the Advanced User Guide for detailed usage**.

	Description
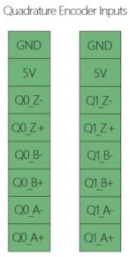	QX_A+/- corresponds to differential encoder A+/- respectively
	QX_B+/- corresponds to differential encoder B+/- respectively
	QX_Z+/- corresponds to differential encoder Z+/- respectively
	5V and GND are connected to the differential encoder 5V and GND respectively

Fig. 34 Definition of the encoder interface terminals

3.2.2.4 Remote control and I/O power

The remote control is active when the robot is in Auto mode, see power-up guide 2.3.2 Working mode. The remote control and I/O power terminals are located in the control cabinet as shown in Figure 22 of the cabinet 3.2.2 Internal interfaces.

Remote control

The robot remote control has 2 inputs: remote ON and remote OFF, with the following functions:

● The remote ON input terminal/GND is connected to both sides of **the self-reset button**, and the robot automatically turns on after **the self-reset button** is pressed and automatically pops up.

● The remote OFF input terminal/GND is connected to both sides of **the self-reset button**. The robot automatically shuts down when **the self-reset button** is pressed and pops up automatically.

Connect **the self-reset button** wiring as shown in Figure 35.

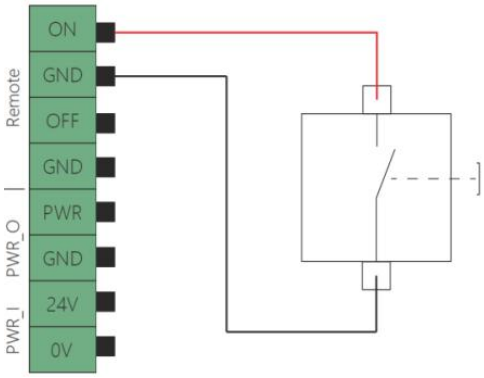

Fig. 35 Wiring diagram for connecting the remote ON self-resetting button

Caution:

The recommended operating interval for remote switching is greater than 10s.

The remote control interface can also be connected to a PLC or other external I/O signal input device to

control the control cabinet and the demonstrator to switch on or off automatically. In this case the input signal level must meet **the low to high level jump**.

The remote ON and OFF input interfaces are both high by default, with the input active low, and their electrical specifications are shown in Table 17.

Table 17 Remote control interface ON/OFF Electrical specification table

Remote Interface	Parameter	Minimum value	Typical value	Maximum value	Unit
ON	ON Voltage range	0	-	15	V
ON	OFF Voltage range	22.5	-	24	V
ON	Current (0-15V)	3	-	6	mA
OFF	ON Voltage range	0	-	15	V
OFF	OFF Voltage range	22.5	-	24	V
OFF	Current (0-15V)	1.5	-	3	mA

I/O Power Supplies

The control cabinet-K20 can provide power for digital I/O either internally or by connecting external power supply devices. Terminal 24V/0V is the I/O power input, and PWR/GND is the +24V power output from the control cabinet internally. The connection method of using internal or external power supply for I/O is shown in Figure 36.

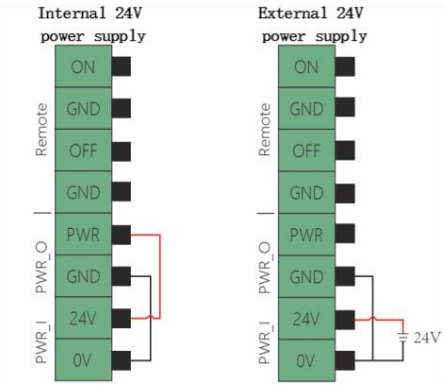

Fig. 36 Power supply for digital I/O

The electrical specifications for the power supply are shown in Table 18.

Table 18 Table of electrical specifications for the power supply

Terminal	Parameter	Minimum value	Typical value	Maximum value	Unit
Internal +24V power supply	-	-	-	-	-
PWR/GND	Voltage	23	24	26	V
PWR/GND	Current	0	-	1	A
External +24V power supply	-	-	-	-	-
24V/0V	Voltage	20	24	26	V
24V/0V	Current	0	-	1.2	A

Caution:

The recommended maximum output current is not to exceed 1A when using PWR/GND for external power supply.

3.2.2.5 Serial communication interface

The Control Cabinet-K20 has one RS232 and two RS485 external serial communication interfaces internally, as shown in Figure 37. The software can configure the serial communication protocol format, see the software chapter for instructions.

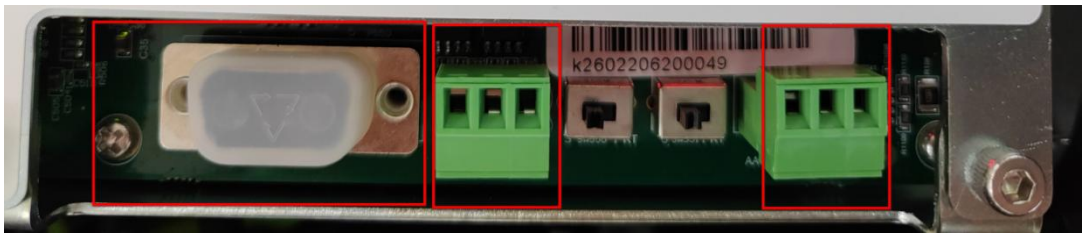

Fig. 37 Diagram of the internal serial communication interface of the control cabinet

3.2.2.5.1 RS232

The Control Cabinet-K20 has 1 standard DB9 male/pin connector inside.

● The software protocol supports custom, Modbus_RTU/ASCII, see the software chapter description.

3.2.2.5.2 RS485

The Control Cabinet-K20 has two internal RS485 bus interface terminals: RS485-1 and RS485-2. Each RS485 interface terminal is equipped with a dip switch that selects whether or not the terminating resistor needs to be matched, with the dip switch on the RT side indicating that the terminating resistor is connected to the circuit.

● When connecting external equipment, if the transmission distance is long (>300m), you can choose to

access the terminal matching resistor to reduce signal interference.

- The software protocol supports custom, Modbus_RTU/ASCII, see the software chapter for instructions.

3.2.2.6 RJ45 EtherCAT network interface

The Control Cabinet-K20 has 1 standard RJ45 interface inside and only supports the EtherCAT real-time Ethernet bus, as shown in Figure 38. For usage please refer to **the Advanced User Guide**.

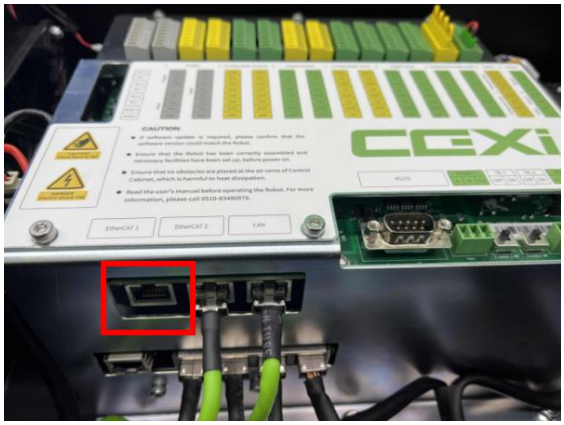

Fig. 38 Diagram of the RJ45 real-time Ethernet bus interface inside the control cabinet

Caution:

When using external expansion axes, EtherCAT devices can be connected via this interface. As the control of external axes involves support of the robot control cabinet algorithms, the use of this function requires consultation with our pre-sales technical service staff for the latest and most detailed information.

3.3 Tool side

The tool-side electrical communication interface includes tool I/O and tool communication ports, each of which has an independent +24V power supply output to provide load current up to 1A, and its structure is shown in Figure 39.

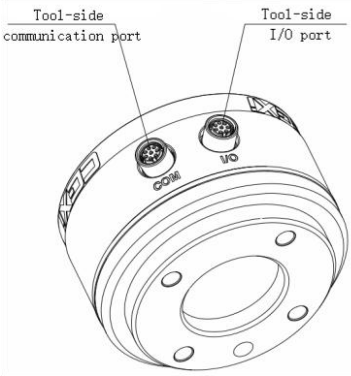

Fig. 39 Schematic diagram of the electrical communication interface at the tool end

The electrical specifications for the tool-side interface are shown in Table 19.

Table 19 Table of electrical specifications for the digital signals of the I/O ports on the tool side

Digital Output	Parameter	Minimum value	Typical value	Maximum value	Unit
DOX	Voltage	-	24	26	V
DOX	Current	0	-	100	mA
Digital Input	**Parameter**	**Minimum value**	**Typical value**	**Maximum value**	**Unit**
DIX	Voltage	0	-	24	V
DIX	ON voltage range	0	-	15	V
DIX	OFF voltage range	21	-	24	V
DIX	Current (15-0V)	2.5	-	6	mA

The electrical specifications for the tool-side analog inputs are shown in Table 20.

Table 20 Table of electrical specifications for the analogue signals of the I/O ports at the tool end

Analog Inputs	Parameter	Minimum value	Typical value	Maximum value	Unit
AIX-GND	Voltage	0	-	10	V
AIX-AG	Resolution	-	12	-	position

3.3.1 Tools I/O

The tool I/O port is a female 8-pin socket, which requires a male M8 aviation plug. The tool end I/O port and connections are shown in Figure 40.

Fig. 40 Schematic diagram of the tool-side I/O electrical communication interface

Caution:

1. The connections between the plugs are of a dummy-proof design and should be inserted and removed with care;
2. Contact your G12 robot arm supplier if you need a cable to connect the tool I/O port;
3. If you purchase your own cables, please pay attention to the connection sequence and the quality of the cables.

The special tool-side I/O connection cable sequence definitions provided by LWIC are shown in Figure 41 and Table 21.

Fig. 41 I/O cable cutaway view

Table 21 Cable Definition

Serial number	Color	Function	Description
1	White	OUTPUT0	Digital Output 0
2	Brown	INPUT0	Digital Input 0
3	green	OUTPUT1	Digital Output 1
4	Yellow	INPUT1	Digital Input 1
5	Gray	AI0	Analog Input 0
6	Pink	AI1	Analog Output 1
7	Blue	GND	Ground
8	Red	+24V	Output Power

The tool I/O external power supply output voltage is +24V and the maximum output current is 1.5A. When the load current exceeds 1.5A, the +24V power supply output will be cut off automatically and enter the current overload protection state.

Caution:

The recommended tool end load current is not greater than 1A.

3.3.2 Tools COM

The tool communication port is an 8-pin socket with male thread, which requires a female M8 aviation plug. The communication port and connection at the tool end are shown in Figure 42.

Fig. 42 Schematic diagram of the COM port electrical communication interface on the tool side

Caution:

1. The connections between the plugs are of a dummy-proof design and should be inserted and removed with care;
2. Contact your G12 robot arm supplier if you need a cable to connect the tool I/O port;
3. If you purchase your own cables, please pay attention to the connection sequence and the quality of the cables.

The definition of the COM end connection cable of the special tool provided by Changguangxi Smart is shown in Figure 43 and Table 22.

Fig. 43 COM end link cable

Table 22 Cable Definition

Serial number	Color	Function	Description
1	White	RX-	EtherCAT Data RX-
2	Brown	RX+	EtherCAT Data RX+
3	green	TX-	EtherCAT Data TX-
4	Yellow	TX+	EtherCAT Data TX+
5	Gray	RS485-A	RS485-A side
6	Pink	RS485-B	RS485-B side
7	Blue	GND	Ground
8	Red	+24V	Output power

4. Maintenance and repair

Collaborative robot maintenance and repair work will be performed by Changguangxi Intelligent Manufacturing (Wuxi) Co., Ltd. or its designated service provider, and all safety instructions in this manual will be strictly observed.

Abandoned robots must be disposed of in accordance with applicable national laws and regulations and national standards and must not be discarded at will.

5. Quality Assurance

5.1 Quality assurance

Ltd. is committed to a 12-month warranty period for its collaborative robots. The collaborative robot and its components will be under warranty for 12 months after it is put into use, during which time Changguangxi Intelligent Manufacturing (Wuxi) Co., Ltd. will provide the necessary spare parts for replacement or repair at no cost if the product is defective due to poor manufacturing or materials. Ltd. will not be liable for any damage or loss caused by defects in the equipment outside the warranty period, such as loss of production or damage to other production equipment.

If the customer has special requirements for the warranty, please contact Changguangxi Intelligent Manufacturing (Wuxi) Co.

5.2 Disclaimers

The Warranty is void if the defect is caused by improper handling or failure to follow the information described in the user manual.

The warranty does not cover failures including, but not limited to, the following:

1. not conforming to industry standards or not installed, wired, and connected to other control equipment as required by the user's manual;

2、Use beyond the specifications or standards shown in the user's manual;

3、Use of the product for occasions other than the intended use;

4, storage methods, working environment beyond the specified scope of the user manual (such as pollution, salt damage, condensation, etc.);

5, damage to the product caused by improper transportation, accidents or external collisions;

6, without the permission of Changguangxi Intelligent Manufacturing (Wuxi) Co., Ltd, damage caused by their own transformation, commissioning or repair of the robot;

7, fire, earthquake, tsunami, lightning, high winds and floods and other irresistible external forces caused by disasters.

Appendix

A. Robot Technical Specification Sheet

- G12 Collaborative robot arm technical specification sheet

Table A-1 Technical specifications of G12 collaborative robot arm

Parameter	Value / Description
R12 robotic arm	
Model	R12-135S
Weight	36kg (without cable)
Rated load	12kg
Max. working radius	1300mm
Maximum range of motion of the joint	Joint 1, 2, 4, 5, 6: ±360° Joint 3: ±165°
Maximum speed of joints	Joint 1, 2: 150°/s Joint 3: 210°/s Joint 4, 5, 6: 240°/s
Maximum speed of end TCP	3m/s
Repeat positioning accuracy (max.)	±0.03mm
Absolute positioning accuracy (max.)	0.5mm
Degree of freedom	6 degrees of freedom of rotation
Control bus/frequency	EtherCAT/1kHz
Noise	≦60dB
Rated power	550W
Operating ambient temperature	-5℃-55℃
Operating ambient humidity	5%~90%RH, no condensation
Installation method	Arbitrary angle
Protection grade	IP65
Tool side	
Tool I/O Port	1-channel 24V/1A power output; 2-channel DI; 2-channel DO; 2-channel AI
Tool COM port	1-channel 24V/1A power output; 1-channel RS485; 1-channel EtherCAT

- Control cabinet-K20 technical specification table

Table A-2 Control cabinet-K20 technical specifications

Parameter	Value / Description			
Dimension	429mm*437mm*190mm(L*H*W)			
Weight	13.6kg			
External panel communication interface of the control cabinet	RJ45 2-way, 10/100M self-adaptive Ethernet port, supports Modbus TCP communication protocol			
Control cabinet internal bus communication interface	RS232 1 channel, supports custom or Modbus_RTU/ASCII protocol RS485 2 way, support custom or Modbus RTU/ASCII protocol RJ45 1 way, 100M network port, supports EtherCAT devices			
Other communication interfaces inside the control cabinet	Emergency stop input	2 way	Safe stop input	2 way
	Remote power-on input	1 way	Remote shutdown input	1 way
	Digital Inputs	8 Road	Digital Outputs	8 Road
	Configurable digital inputs	8 Road	Configurable digital outputs	8 Road
	Analog Inputs	3 Road	Analog Outputs	1 Road
	Differential encoder input	2 way (provide 5V/150mA power output)		
Power supply	Rated voltage AC 200V~240V, rated frequency 50~60Hz (fluctuation range ±5%)			
Protection level	IP44			
Working ambient temperature	-5℃~55℃			
Working environment humidity	5%-90%RH, no condensation			

- CGXi Demonstrator Technical Specification Sheet

Table A-3 Technical specifications of the demonstrator

Parameter	Value / Description
Dimension	289mm*256mm(L*W)
Weight	1.5kg
Protection grade	IP44
Cable length	5m
Working temperature	-5℃～55℃
Working environment humidity	5%~90%RH, no condensation

B. Payload

The payload depends on the load center of gravity offset, which is the distance between the center of the tool output flange and the center of gravity of the attached payload. The load capacity of the robot arm varies with the amount of load center of gravity offset.

● The relationship curve between payload and load center of gravity offset for the G12 collaborative robot is shown in Figure B-1.

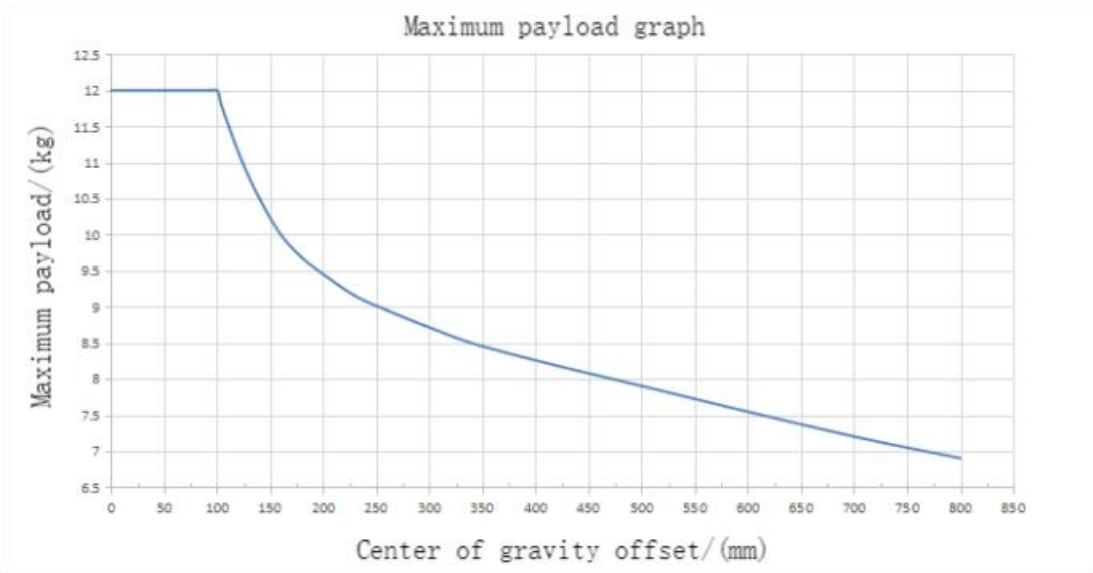

Fig. B-1 Payload and center of gravity offset curve

Warning:

1.If incorrect load data or loads other than those in the load chart are used, the gearbox and the mechanical structure may be damaged by overloading;

2.The actual installed load weight and the offset of the load centre of gravity must not exceed the values shown above, otherwise the service life of the robot arm will be affected.

C. Accreditation

CE Certificate of Conformity

TÜV NORD

Certificate of Conformity

This is to certify that the following products comply with the essential requirement (Annex I) of the below European Directive:

Machinery Directive 2006/42/EC

Certificate No.:	CER-IND1102822110002001 Rev.A
Applicant:	Changguangxi Intelligent Manufacturing(WuXi)Co.,Ltd 27-1 Jianze Road, Binhu District, Wuxi city, Jiangsu Province, China
Product:	Collaborative Robot
Type:	G3, G6, G12
Standard(s):	EN ISO 12100:2010 EN ISO 10218-1:2011 EN 60204-1:2018 EN ISO 13849-1:2015
Assessment report No.:	IR- IND1102822110002001 Rev.A
Date of issue:	05.11.2021

This certificate of conformity is based on the evaluation of samples of the above mentioned product. It does not imply an assessment of the production of the product, and it does not permit the use of a mark of conformity or of a safety mark of the TÜV NORD. The holder of this certificate may use this certificate together with his EC-Declaration of Conformity. This Certificate will be invalid in case the product structures or the directive or standards above changed.

CE The CE marking may be affixed on the product if all relevant and effective Directives are complied with.

Mr.Jeffery Fan
Name and Signature

Issued at Shanghai
Place, Stamp

TÜV NORD (HANGZHOU) CO., LTD. TÜV NORD

TÜV NORD (Hangzhou) Co., Ltd
B502,No.9,JiuhuanRoad, Jinggan District, Hangzhou, China, 300019
SH Branch: No.1, Lane 288 Kangning Road Jingan District, Shanghai 200443, China
Tel: +86-21-33196200 Fax:+86-21-33196334
www.tuv-nord.com/cn

质量管理体系认证证书

证书编号：19821QH2260R0M
统一社会信用代码/组织机构代码：91320211MA1XJ3FW88

兹证明：

长广溪智能制造（无锡）有限公司

质量管理体系符合：GB/T19001-2016 idt ISO9001:2015

证书覆盖范围：工业机器人的研发、组装

注册地址：无锡市滨湖区绣溪路 50 号 k-park 商务中心 3 号楼 4 楼 4013
经营地址：江苏省无锡市滨湖区棟泽路 27-1 号 2 楼、3 楼

首次发证日期：2021 年 08 月 31 日
本次发证日期：2021 年 08 月 31 日
证书有效日期：2024 年 08 月 30 日

中国认可
国际互认
管理体系
MANAGEMENT SYSTEM
CNAS C178-M

签发：

本证书在国家规定的各行政许可、资质许可有效期内使用有效
获证组织必须定期接受监督审核并经审核合格后，方可保持证书有效性
证书有效性可通过新纪源网站www.xjyrz.com查询或国家认监委网站www.cnca.gov.cn查询，也可通过扫描二维码查询

北京新纪源认证有限公司
地址：北京市朝阳区南湖东园122楼7层北区805（邮编100102）

环境管理体系认证证书

证书编号：19821EH1078R0M
统一社会信用代码/组织机构代码：91320211MA1XJ3FW88

兹证明：

长广溪智能制造（无锡）有限公司

环境管理体系符合：GB/T24001-2016 idt ISO14001:2015

证书覆盖范围：**工业机器人的研发、组装**

注册地址：无锡市滨湖区绣溪路 50 号 k-park 商务中心 3 号楼 4 楼 4013
经营地址：江苏省无锡市滨湖区棟泽路 27-1 号 2 楼、3 楼

首次发证日期：2021 年 08 月 31 日
本次发证日期：2021 年 08 月 31 日
证书有效日期：2024 年 08 月 30 日

中国认可
国际互认
管理体系
MANAGEMENT SYSTEM
CNAS C178-M

BEIJING XINJIYUAN CERTIFICATION CO.,LTD. 北京新纪源认证有限公司 证书专用章 (1) 11010518877

签发：

本证书在国家规定的各行政许可、资质许可有效期内使用有效
获证组织必须定期接受监督审核并经审核合格后，方可保持证书有效性
证书有效性可通过新纪源网站www.xjyrz.com查询或国家认监委网站www.cnca.gov.cn查询，也可通过扫描二维码查询

北京新纪源认证有限公司

地址：北京市朝阳区南湖东园122楼7层北区805（邮编100102）

职业健康安全管理体系认证证书

证书编号：19821SH0984R0M
统一社会信用代码/组织机构代码：91320211MA1XJ3FW88

兹证明：

长广溪智能制造（无锡）有限公司

职业健康安全管理体系符合：GB/T45001-2020 idt ISO45001:2018

证书覆盖范围：**工业机器人的研发、组装**

注册地址：无锡市滨湖区绣溪路 50 号 k-park 商务中心 3 号楼 4 楼 4013
经营地址：江苏省无锡市滨湖区棟泽路 27-1 号 2 楼、3 楼

首次发证日期：2021 年 08 月 31 日
本次发证日期：2021 年 08 月 31 日
证书有效日期：2024 年 08 月 30 日

中国认可
国际互认
管理体系
MANAGEMENT SYSTEM
CNAS C178-M

BEIJING XINJIYUAN CERTIFICATION CO.,LTD. 北京新纪源认证有限公司 证书专用章 (1) 110105188776

签发：

本证书在国家规定的各行政许可、资质许可有效期内使用有效
获证组织必须定期接受监督审核并经审核合格后，方可保持证书有效性
证书有效性可通过新纪源网站www.xjyrz.com查询或国家认监委网站www.cnca.gov.cn查询，也可通过扫描二维码查询

北京新纪源认证有限公司

地址：北京市朝阳区南湖东园122楼7层北区805（邮编100102）

SEMI S2 Certificate of Approval

SGS

LETTER OF COMPLIANCE

No.:	SEMI SHES2204007366MD
Applicant:	Changguangxi Intelligent Manufacturing (Wuxi) Co., Ltd. 27-1, Lianze Road, Binhu District, Wuxi City, Jiangsu Province, China
Manufacturer:	Changguangxi Intelligent Manufacturing (Wuxi) Co., Ltd. 27-1, Lianze Road, Binhu District, Wuxi City, Jiangsu Province, China
Product Name:	Collaborative robot
Model No.:	G3, G6, G12, G18, X3, X6, X12, X18
Trade Mark:	CGXi
Additional Information (if any):	--

Sufficient samples of the product have been tested and found to be in conformity with

Test Standard:	SEMI S2-0821
as shown in the Test Report Number(s):	SHES220400736601

This Letter of Compliance has been granted to the applicant based on the results of tests, performed by Laboratory of SGS-CSTC Standards Technical Services Co., Ltd. on sample of the above-mentioned product(s). The most results of the safety evaluation and test of this sample are satisfactory to the applicable requirements of SEMI S2 Environmental, Health and Safety Guidelines in mentioned edition.

Andrew Zhai
Technical Manager
SGS-CSTC

2022-07-22

Copyright of this verification is owned by SGS-CSTC Standards Technical Services Co., Ltd. and may not be reproduced other than in full and with the prior approval of the General Manager. This verification is subjected to the governance of the General Conditions of Services which can be accessible at https://www.sgs.com/en/terms-and-conditions.

Member of SGS Group (Société Générale de Surveillance)

Safety-VOC-F14 Rev.1.0/ 2022-03-10
Page 1 of 1